www.collegehillshonda.com/parts

HONDA

# INSTALLATION INSTRUCTIONS

| Accessory | Application | Publications No. |
|---|---|---|
| CD/CASSETTE PLAYER | 2001-2005 CIVIC 2- AND 4-DOOR | All 27857 |
| | | Issue Date AUG 2004 |

**PARTS LIST**
**Cassette Player:**
**P/N 08A53-S5A-100**

Cassette player

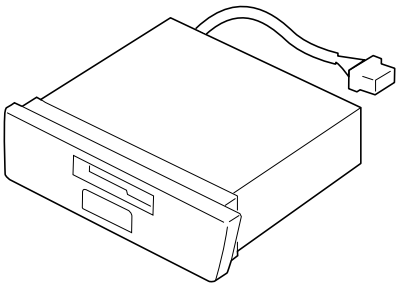

Owner's Manual

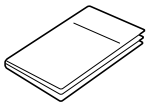

5 Washer-screws, 5 x 8 mm

Harness clip

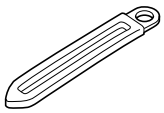

Adhesive pad

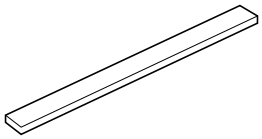

Rubber pad

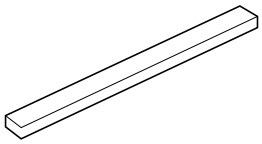

**CD Player:**
**P/N 08A53-S5D-100**

CD player

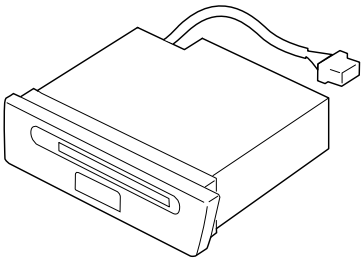

Owner's Manual

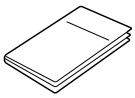

4 Washer-screws, 5 x 8 mm

Washer-screw, 4 x 8 mm

Harness clip

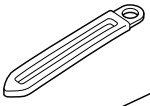

Rubber pad

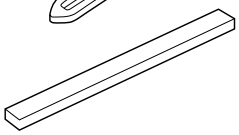

**TOOLS AND SUPPLIES REQUIRED**

Phillips screwdriver
8 mm and 10 mm Sockets
Ratchet
Shop towel
Utility knife
Isopropyl alcohol
Tape measure

**INSTALLATION**

**Customer Information:** The information in this installation instruction is intended for use only by skilled technicians who have the proper tools, equipment, and training to correctly and safely add equipment to your vehicle. These procedures should not be attempted by "do-it-yourselfers."

1. Make sure you have the anti-theft code for the radio, then write down the radio station presets.
2. Disconnect the negative cable from the battery.

© 2004 American Honda Motor Co., Inc - All Rights Reserved.

***If the vehicle is equipped with a center console armrest, go to step 6, otherwise; continue with step 3.***

3. Pull up on the parking brake lever, then remove the console box (nine clips).

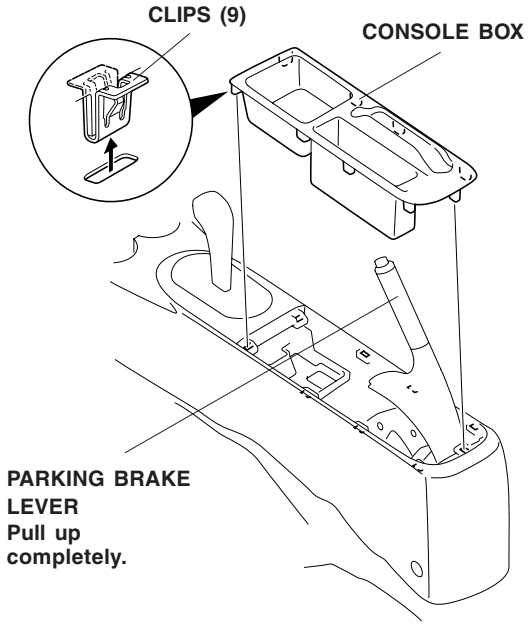


4. Remove the center console.

***A/T Model:***

- Place the shift lever in the Neutral position.
- Remove the two self-tapping screws, two screws, and two clips that fasten the center console and remove the console
- If equipped with an optional seat armrest, remove the console after reclining the seat-back.

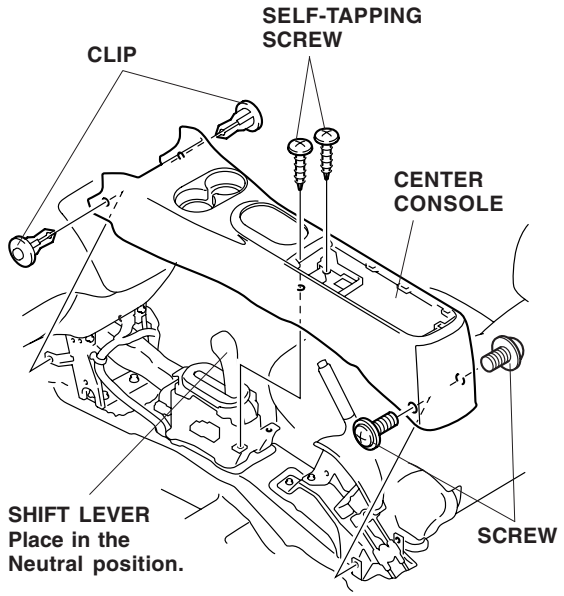


***M/T Model:***

- Remove the shift knob from the lever by holding the plastic section above the boot down firmly with one hand and turning the knob in a counterclockwise with the other hand.
- Remove the two self-tapping screws, two screws, and two clips that fasten the center console and remove the console.

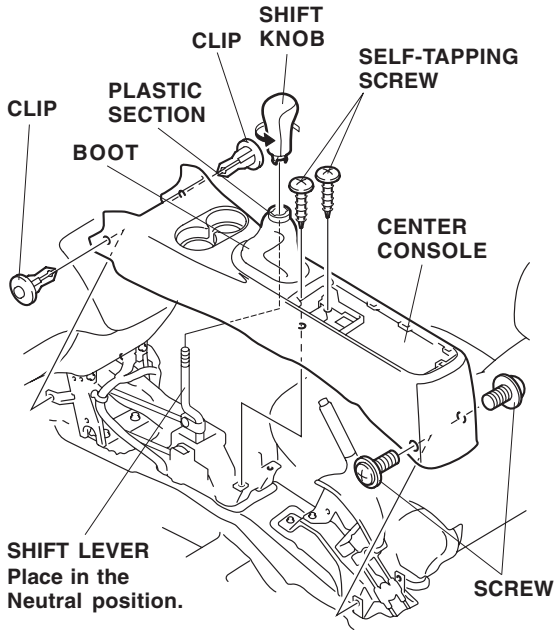




© 2004 American Honda Motor Co., Inc - All Rights Reserved.

5. Remove the dashboard center lower cover.

***Without a Cigarette Lighter and Ashtray:***

- With the parking brake applied, place the gear shift lever in the Neutral position.
- Gently pry out on the lower cover to release the six retaining clips.
- Unplug the accessory power socket connector (if equipped, unplug the fog light harness), and remove the lower cover.

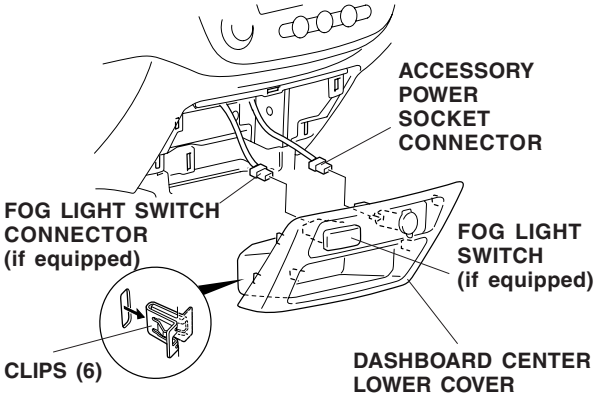


***With a Cigarette Lighter and Ashtray:***

- With the parking brake applied, place the gear shift lever in the Neutral position.
- Remove the ashtray.
- Inside the ashtray opening, remove the one self-tapping screw securing the dashboard center lower cover.
- Gently pry out on the lower cover to release the six retaining clips.

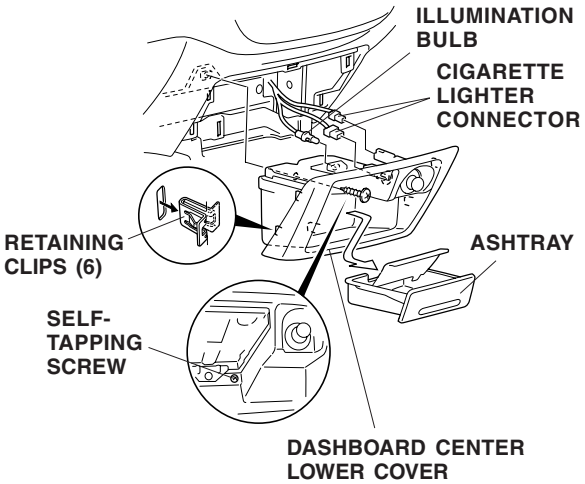


***If the vehicle is not equipped with a center console armrest, go to step 10, otherwise; continue with step 6.***

6. Remove the escutcheon, and the center console trim:

***A/T Model:***

- With the parking brake applied, place the shift lever in the Neutral position.
- Pry up on the four retaining tabs and remove the escutcheon.
- Pry up on the three clips and six retaining tabs and remove the center console trim.

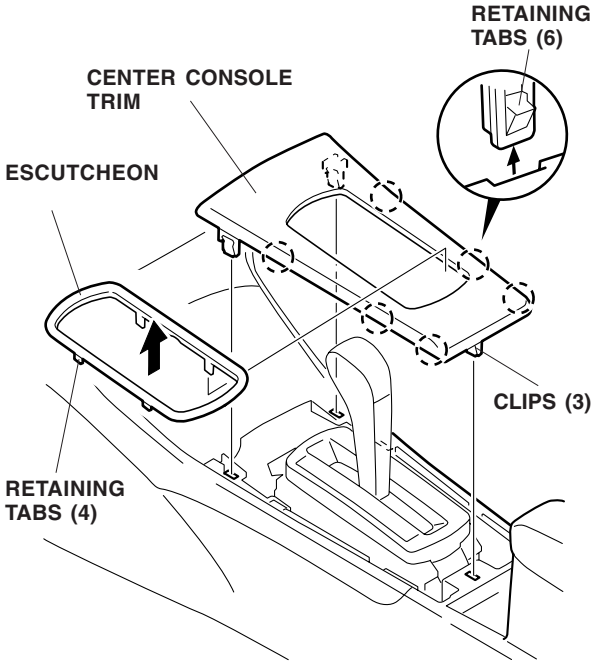


© 2004 American Honda Motor Co., Inc - All Rights Reserved.

***M/T Model:***

- Apply the parking brake.
- Remove the shift knob from the lever by holding the plastic section above the boot down firmly with one hand and turning the knob counterclockwise with the other hand.
- Pry up on the three clips and six retaining tabs and remove the center console trim.

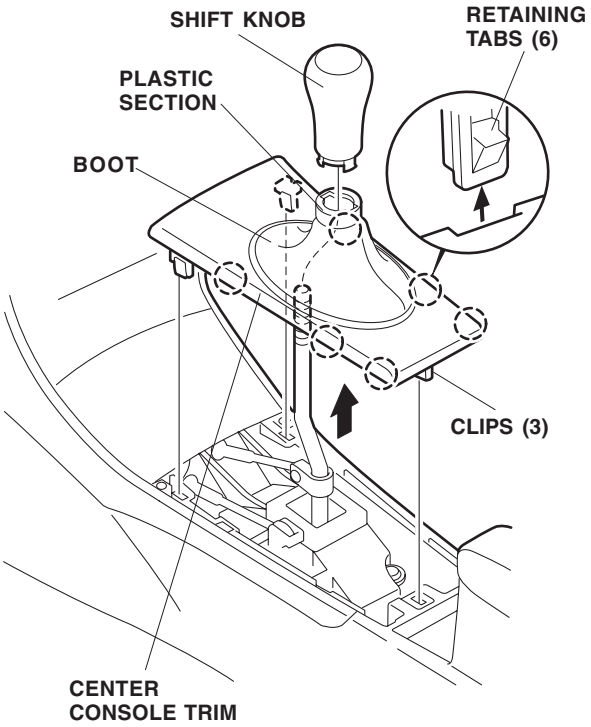


7. Remove the dashboard center lower cover.

***Without a Cigarette Lighter and Ashtray:***

- Remove the two self-tapping screws that fasten the dashboard center lower cover.
- Gently pry out on the dashboard center lower cover to release the rear four clips, then pull the cover rearward to release five clips and one retaining tab.
- Unplug the accessory power socket connector (If equipped, unplug the fog light harness), and remove the dashboard center lower cover.

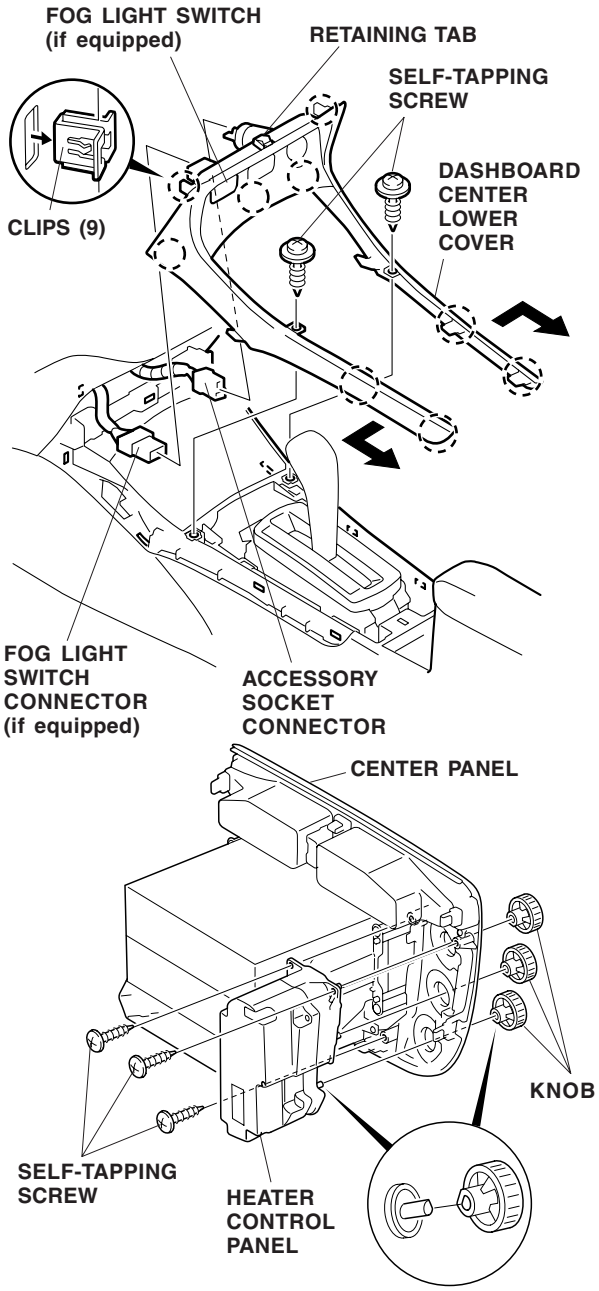






© 2004 American Honda Motor Co., Inc - All Rights Reserved.

***With a Cigarette Lighter and Ashtray:***

- Remove the ashtray. Inside the ashtray opening, remove the one self-tapping screw.
- Remove the two self-tapping screws that fasten the dashboard center lower cover.
- Gently pry out on the dashboard center lower cover to release the rear four clips, then pull the cover rearward to release five clips and one retaining tab.
- Unplug the cigarette lighter connector, the accessory power socket connector, and the illumination bulb, then remove the lower cover.

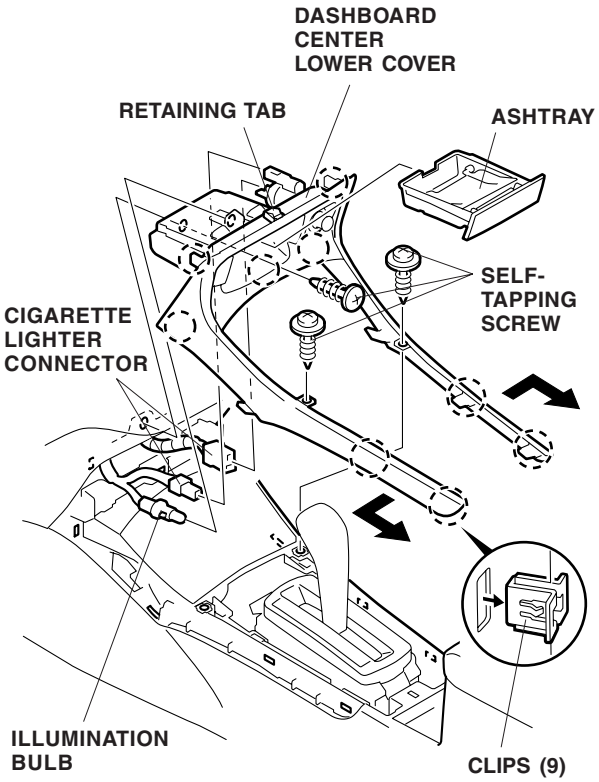


8. Open the center console lid, and remove the mat.

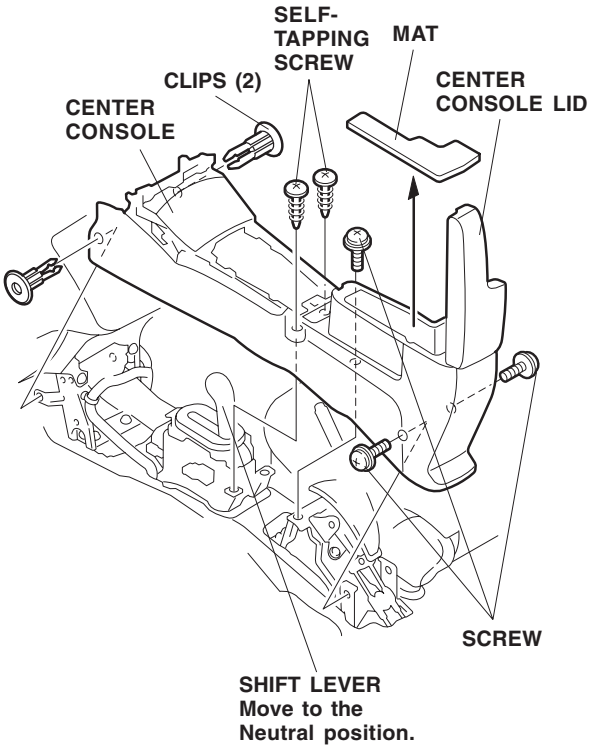


9. Remove the two clips, two self-tapping screws and three screws that fasten the center console. Move the shift lever to the Neutral position, and remove the center console.

© 2004 American Honda Motor Co., Inc - All Rights Reserved.

10. Remove the center panel:
    - Remove the two bolts from the bottom of the center panel.
    - Reach through the bottom opening, and push out on the center panel bracket to release the nine clips.
    - Unplug the five connectors and the antenna lead, then remove the center panel.

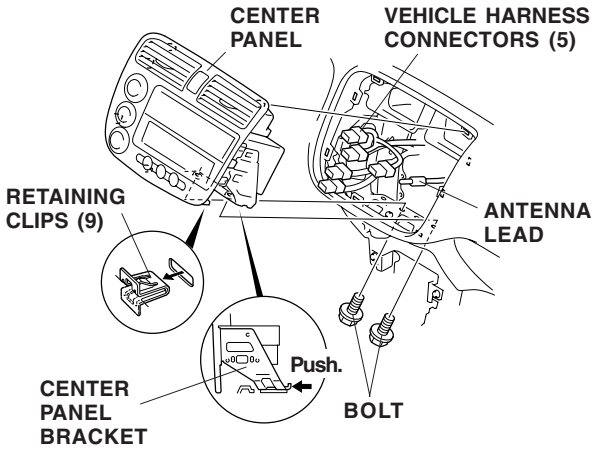


11. Gently pull out on each knob to remove them from the heater control panel.

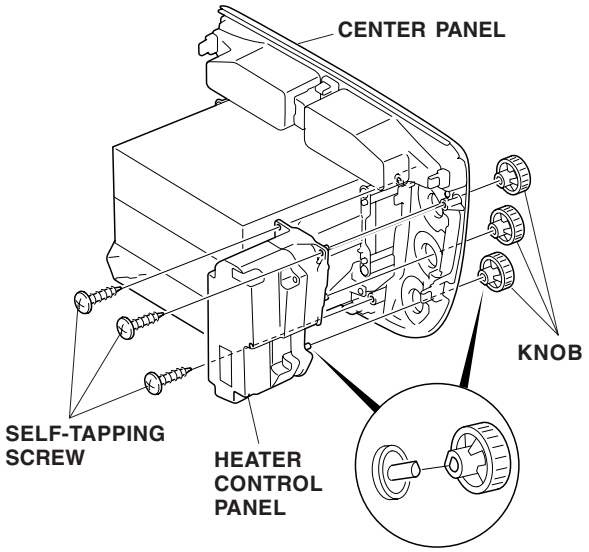


12. Remove the three self-tapping screws that fasten the heater control panel to the center panel, and remove the heater control panel.

13. Remove the pocket (four self-tapping screws).

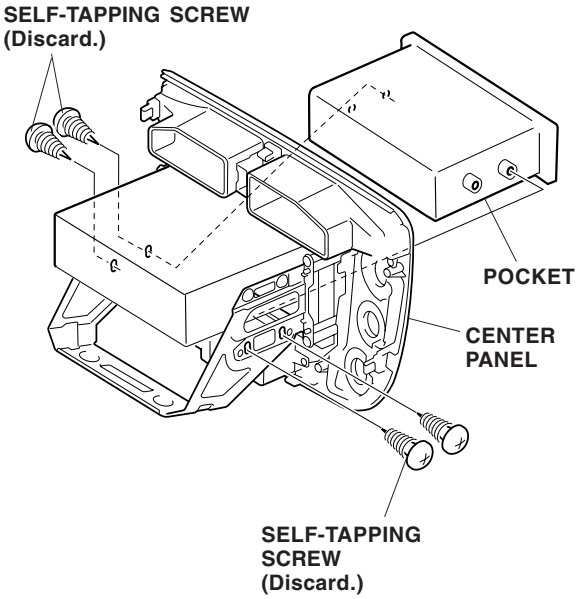


14. Use a tape measure to measure and mark the rubber pad as shown. Using scissors, cut the rubber pad into three pieces. Remove the adhesive backing from each of the rubber pads, and attach them to the center panel in the areas shown.

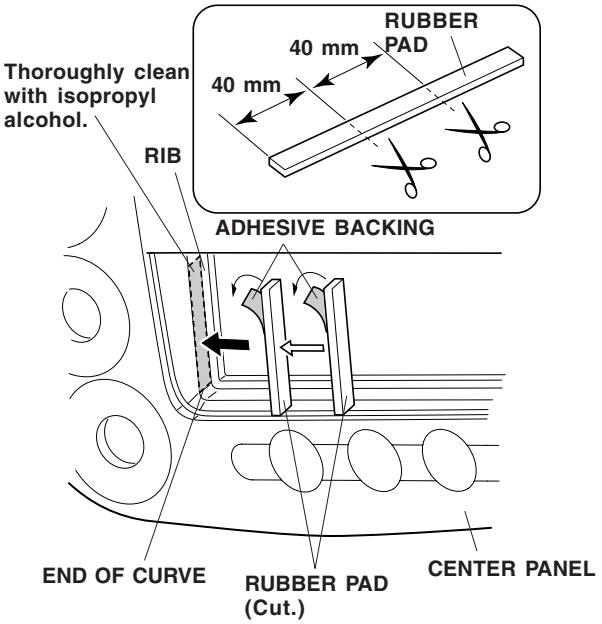




© 2004 American Honda Motor Co., Inc - All Rights Reserved.

***If you're installing a cassette player, continue with step 15; otherwise, go to step 17.***

15. Using a utility knife, cut off the bottom rib from the center panel at the lower edge of the audio opening. Remove all burrs. Before attaching the rubber pads, thoroughly clean the areas where the rubber pads will attach with isopropyl alcohol.

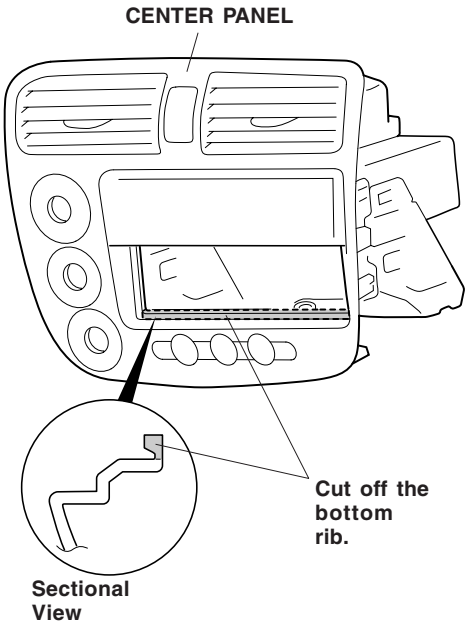


16. Remove the adhesive backing from the adhesive pad, and attach it to the bottom of the cassette player in the area shown.

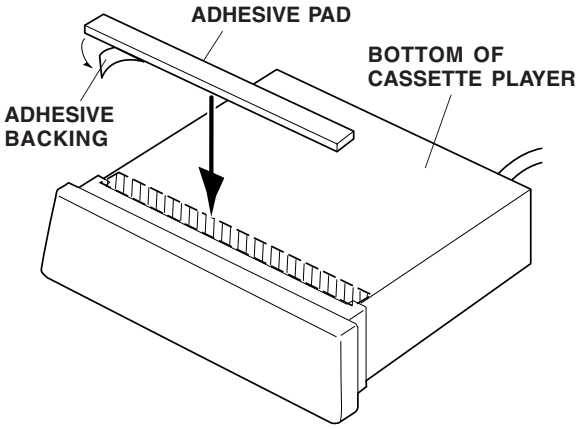


17. Slide the CD or cassette player into the opening of the center panel, then install the four screws provided with the CD or cassette player.

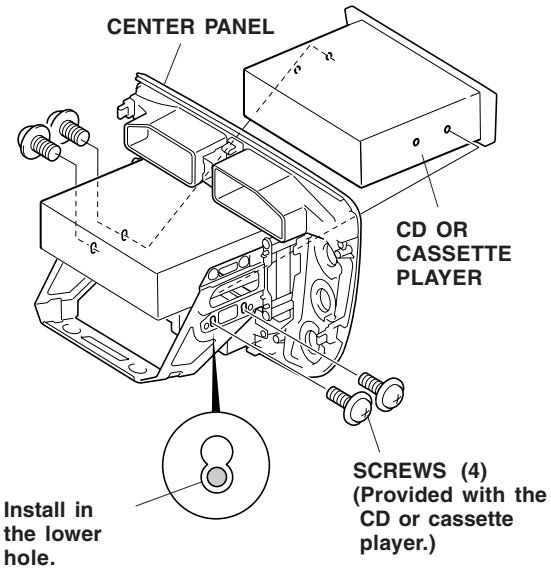


18. Attach the harness clip to the rear of the CD or cassette player with the washer-screw provided.

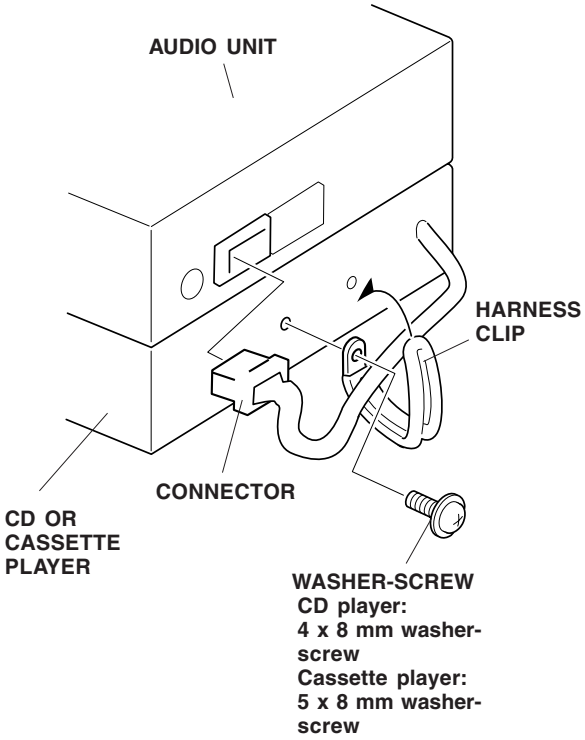


19. Plug the connector from the CD or cassette player into the rear of the audio unit, and secure the harness with the harness clip.

© 2004 American Honda Motor Co., Inc - All Rights Reserved.

20. Reinstall the heater control panel and knobs on the center panel.

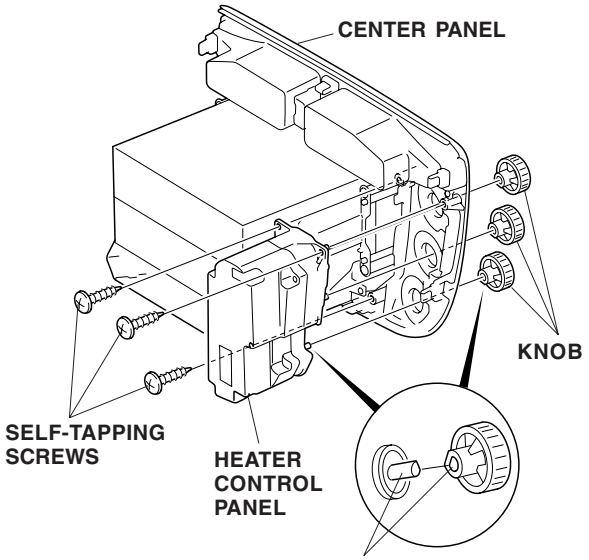


**To reinstall the knobs, align the flat surface on the rod with the flat surface on the knob.**

21. Plug in the five vehicle harness connectors, then plug the antenna lead into the rear of the audio unit.

22. Reinstall the center panel with the two bolts.

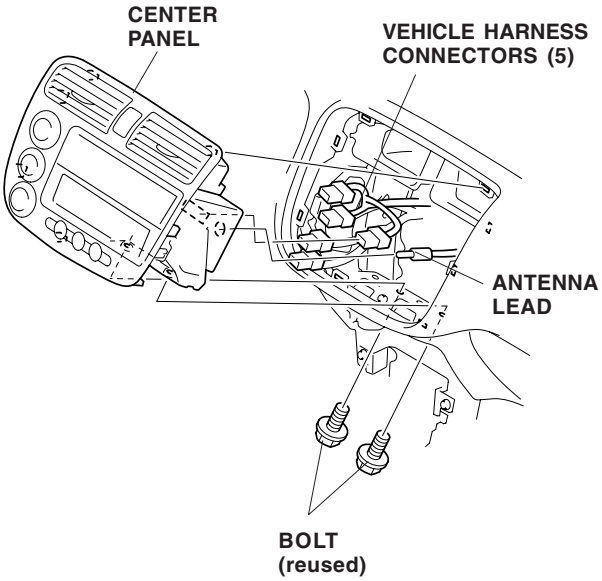


23. Reconnect the negative cable to the battery.

24. Enter the anti-theft code, and reset the customer's radio station presets.

25. Reset the clock.

26. Check operation of the CD or cassette player according to the Owner's Manual.

27. Reinstall all removed parts. Check that all clips and fasteners are installed securely.

28. Place the Owner's Manual for the CD player or the cassette player in the glove box.

29. Test the operation of the accessory socket/ cigarette lighter.

    NOTE: Whenever the battery is disconnected, the driver's window AUTO function is disabled.

30. Start the engine. Push down on the driver's window switch until the window is fully open.

31. Pull up on the driver's window switch to close the window completely, then hold the switch for 2 seconds or more.

32. Lower and raise the driver's window to check operation of the driver's window AUTO function.

33. Do the ECM/PCM idle learn procedure.

    – Make sure all electrical items are turned off.

    – Start the engine. Hold the engine speed at 3,000 rpm with no load (in Park or Neutral) until the radiator fan comes on.

    – Let the engine idle for about 5 minutes with the throttle fully closed and with all electrical items off.

      NOTE: If the radiator fan comes on during this step, the time it operates must not be included in the 5 minutes.





© 2004 American Honda Motor Co., Inc - All Rights Reserved.